HODGE CENTER
COOLING TOWERS REPLACEMENT
SC STATE PROJECT #H34-9542-JM-C

UNIVERSITY OF SOUTH CAROLINA UPSTATE

Spartanburg, South Carolina

DESIGN TEAM

OWNER

UNIVERSITY OF SOUTH CAROLINA UPSTATE
800 UNIVERSITY WAY
SPARTANBURG, SC 29303 (864) 503-5538

MECHANICAL/PLUMBING ENGINEER

PERITUS ENGINEERS & ASSOCIATES, INC.
10 E. DORCHESTER BLVD.
GREENVILLE, SC 29605 (864) 277-8287
JODY C. PARKER, P.E.

ELECTRICAL ENGINEER

BURDETTE ENGINEERING, INC.
102 PILGRIM ROAD
GREENVILLE, SC 29607 (864) 297-8717
DON BURDETTE, P.E.

STRUCTURAL ENGINEER

ROYAL ENGINEERING, INC.
20 WEST STONE AVENUE
GREENVILLE, SC 29609 (864) 235-4425
BRUCE ROYAL, P.E.

HODGE CENTER
COOLING TOWERS SITE

VICINITY MAP

INDEX OF DRAWINGS

DWG. #	SHEET TITLE
T-1	PROJECT TITLE SHEET
MECHANICAL DRAWINGS	
DMP-1	HVAC PIPING DEMOLITION PLANS
MP-1	HVAC PIPING PLANS
MP-2	HVAC PIPING ELEVATIONS
MP-3	SCHEDULES & PIPING DIAGRAMS
ELECTRICAL DRAWINGS	
E-1	ELECTRICAL DEMOLITION PLAN, LEGEND, AND SCHEDULES
E-2	ELECTRICAL PLAN
STRUCTURAL DRAWINGS	
S-1	SUPPORTING STEEL PLANS AND DETAILS
S-2	COOLING TOWER PIPING SUPPORT ELEVATIONS AND DETAILS

This drawing is the property of Peritus Engineers & Associates, Inc. and shall not be used or reproduced without their written permission. © 2012 PERITUS ENGINEERS & ASSOCIATES, INC.

NO.	DATE	BY	DESCRIPTION
0	07/06/12	JCP	ISSUED FOR BID

REVISIONS

ROYAL ENGINEERING, INC.
P.O. BOX 17828
GREENVILLE S.C.
29606
864.235.4425
FAX 864.235.1330
royalen@royalenginc.com

BURDETTE ENGINEERING, INC.
102 Pilgrim Road
Greenville, South Carolina 29607
(864) 297-8717 (V)
(864) 297-8719 (FAX)
E-MAIL: burdette@burdetteengr.com

Peritus
ENGINEERS & ASSOCIATES, INC.
P. O. BOX 16598
GREENVILLE, SOUTH CAROLINA
864-277-8287
FAX: 864-277-6290
E-MAIL: peritus@peritusengineers.com

© 2012 PERITUS ENGINEERS & ASSOCIATES, INC.

HODGE CENTER
COOLING TOWERS REPLACEMENT
SC STATE PROJECT #H34-9542-JM-C
SPARTANBURG, SOUTH CAROLINA

DESIGN JCP / DRAWN TMI
CHECKED JCP
DATE 6/22/12
JOB NO. PERITUS #120113
SHEET T-1
1 OF 1 SHEETS

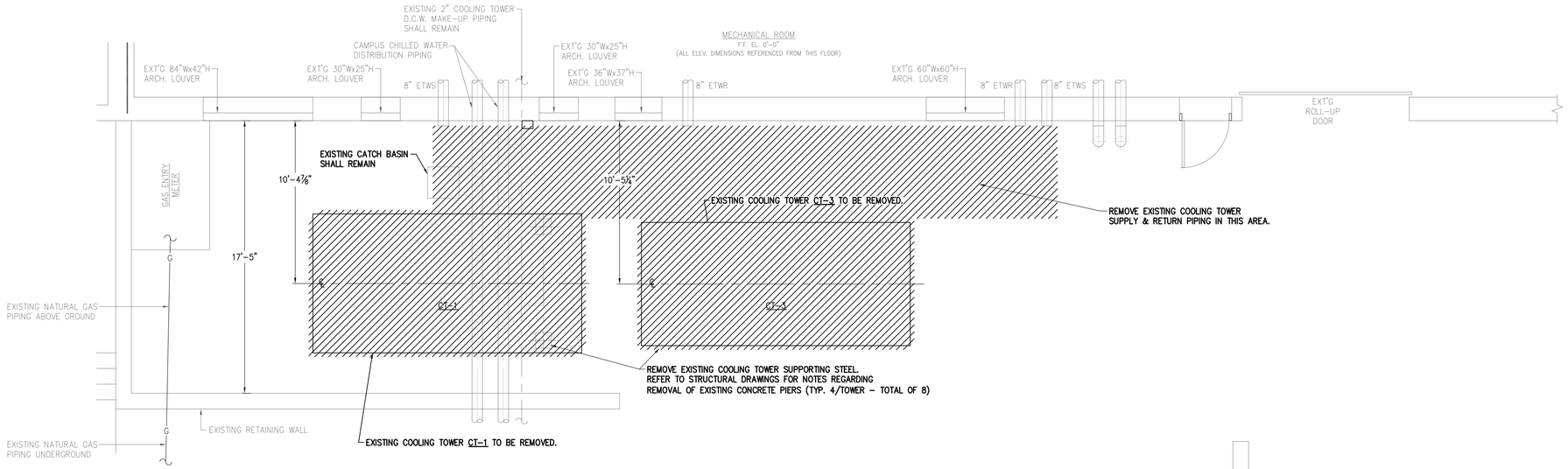

PARTIAL HVAC PIPING DEMOLITION PLAN

SCALE: ¼" = 1'-0"

HATCHED AREA INDICATES ITEMS TO BE REMOVED

DEMOLITION WORK NOTES:

1. REMOVE AND DISPOSE OF EXISTING COOLING TOWERS INCLUDING EXISTING TOWER WATER SUPPLY AND RETURN PIPING UP TO MECHANICAL ROOM EXTERIOR WALL. REMAINING PIPING STUBBED THROUGH WALL SHALL BE MADE SUITABLE FOR NEW PIPING CONNECTIONS.
2. REFER TO STRUCTURAL DRAWINGS FOR REMOVAL OF EXISTING COOLING TOWER SUPPORT STRUCTURE.

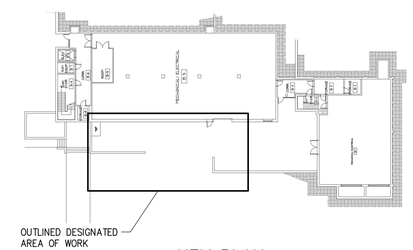

KEY PLAN

NO SCALE

NO.	DATE	BY	DESCRIPTION
0	07/06/12	JCP	ISSUED FOR BID

REVISIONS

SOUTH CAROLINA PROFESSIONAL ENGINEER 07/06/12 No. 25120 JOHN C. PARKER

SOUTH CAROLINA PERITUS ENGINEERS & ASSOCIATES, INC. No. C00053 CERTIFICATE OF AUTHORIZATION

Peritus
ENGINEERS & ASSOCIATES, INC.
P. O. BOX 16598
GREENVILLE, SOUTH CAROLINA
PHONE: 864-277-8290
FAX: 864-277-8290
E-MAIL: peritus@peritusengineers.com

© 2012 PERITUS ENGINEERS & ASSOCIATES, INC.

HODGE CENTER
COOLING TOWERS REPLACEMENT
SC STATE PROJECT #H34-9542-JM-C
SPARTANBURG, SOUTH CAROLINA

DESIGN	DRAWN
JCP	TMI
CHECKED	
JCP	
DATE	
6/22/12	
JOB NO.	
PERITUS #120113	
SHEET	
DMP-1	

1 OF 4 SHEETS

This drawing is the property of Peritus Engineers & Associates, Inc. and shall not be used or reproduced without their written permission. © 2012 PERITUS ENGINEERS & ASSOCIATES, INC.

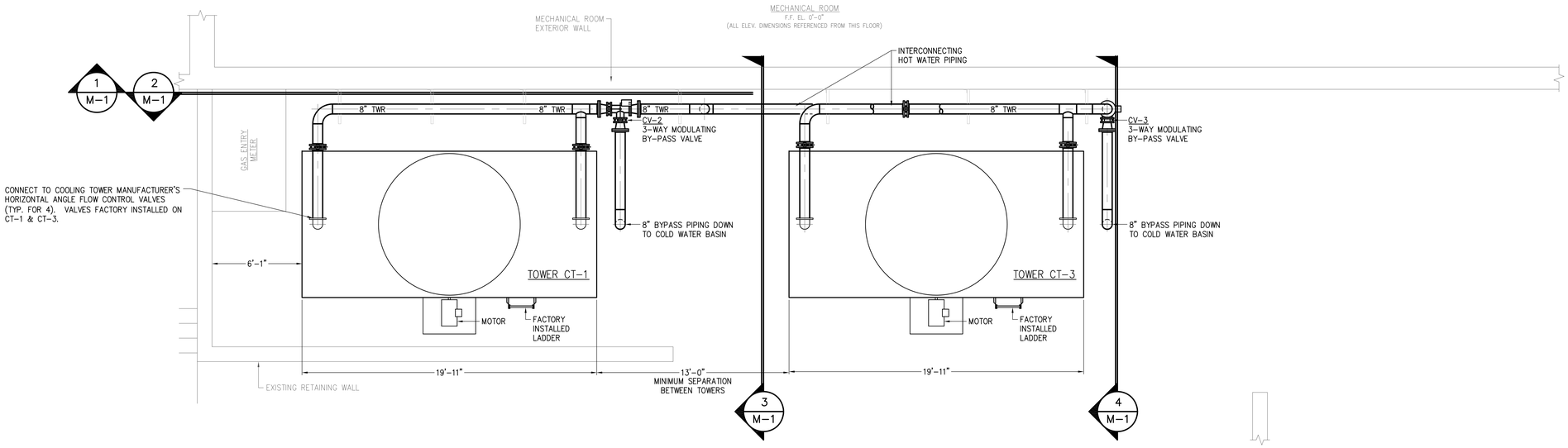

HVAC PIPING PARTIAL NEW WORK PLAN – UPPER LEVEL

SCALE: ¼" = 1'-0"

ALL NEW WORK SHOWN IN **BOLD**

ALL PIPING OUTSIDE AND AT TOWER TO BE ELECTRIC TAPE TRACED

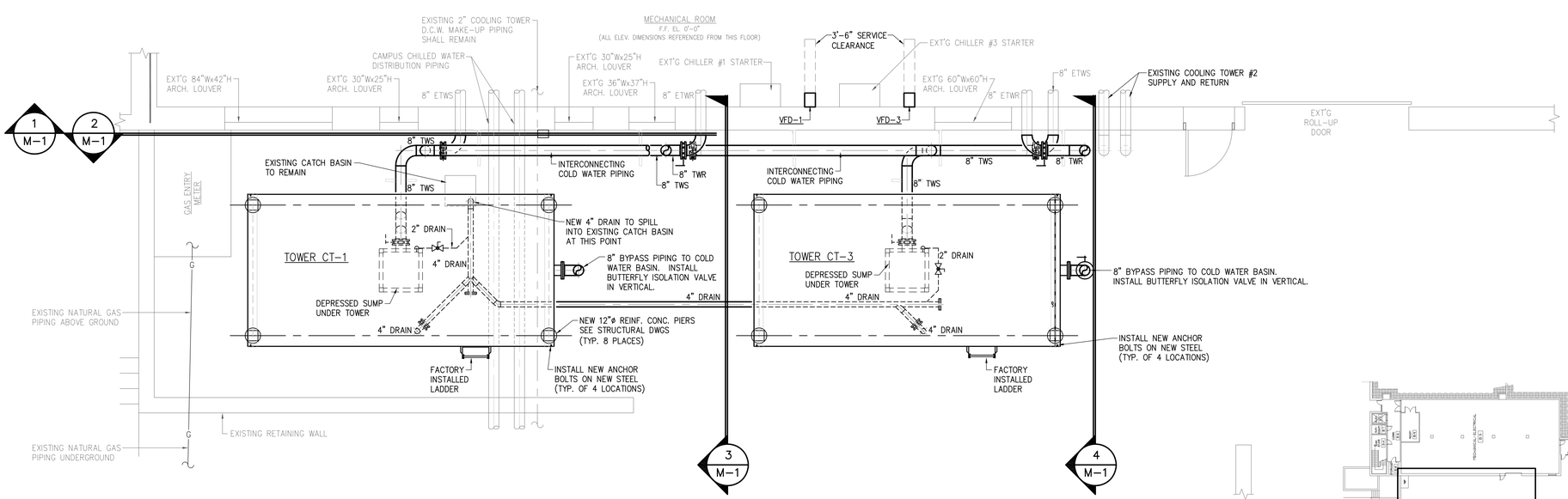

HVAC PIPING PARTIAL NEW WORK PLAN – LOWER LEVEL

SCALE: ¼" = 1'-0"

ALL NEW WORK SHOWN IN **BOLD**

ALL PIPING OUTSIDE AND AT TOWER TO BE ELECTRIC HEAT TRACED

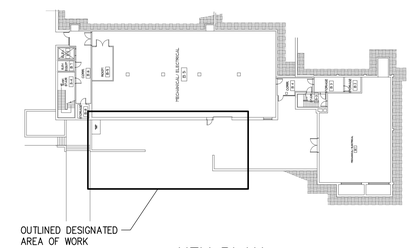

KEY PLAN

NO SCALE

NO.	DATE	BY	DESCRIPTION
0	07/06/12	JCP	ISSUED FOR BID

REVISIONS

Peritus ENGINEERS & ASSOCIATES, INC.
P. O. BOX 16598
GREENVILLE, SOUTH CAROLINA
PHONE: 864-277-8290
FAX: 864-277-8290
E-MAIL: peritus@peritusengineers.com

© 2012 PERITUS ENGINEERS & ASSOCIATES, INC.

HODGE CENTER
COOLING TOWERS REPLACEMENT
SC STATE PROJECT #H34-9542-JM-C
SPARTANBURG, SOUTH CAROLINA

DESIGN	JCP
DRAWN	TMI
CHECKED	JCP
DATE	6/22/12
JOB NO.	PERITUS #120113
SHEET	MP-1

2 OF 4 SHEETS

This drawing is the property of Peritus Engineers & Associates, Inc. and shall not be used or reproduced without their written permission.

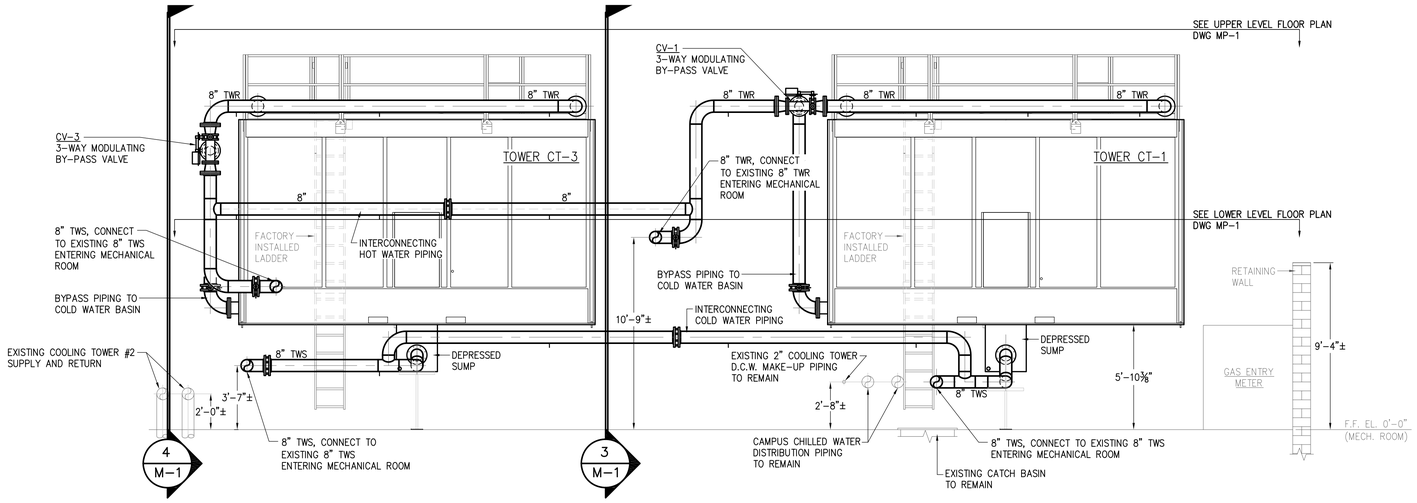

2 MP-1 COOLING TOWER PIPING ELEVATION

SCALE: ¼" = 1'-0"

ALL ELEV. DIMENSIONS REFERENCED FROM MECHANICAL ROOM FLOOR

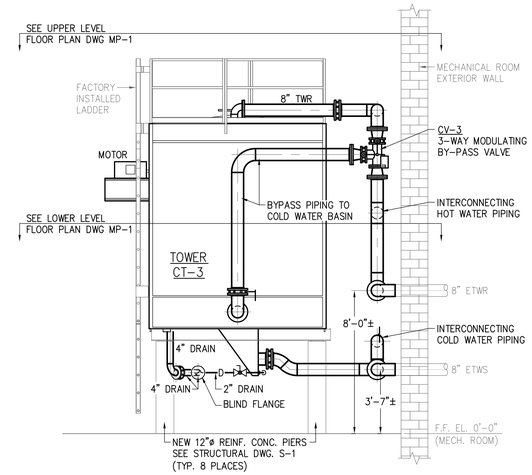

4 MP-1 COOLING TOWER #3 PIPING ELEVATION

SCALE: ¼" = 1'-0"

ALL ELEV. DIMENSIONS REFERENCED FROM MECHANICAL ROOM FLOOR

EXISTING PIPING PENETRATIONS THROUGH BUILDING EXTERIOR WALL SHALL BE RESEALED WATERTIGHT AFTER NEW CONNECTIONS ARE MADE. INSULATION SHALL EXTEND THROUGH WALL.

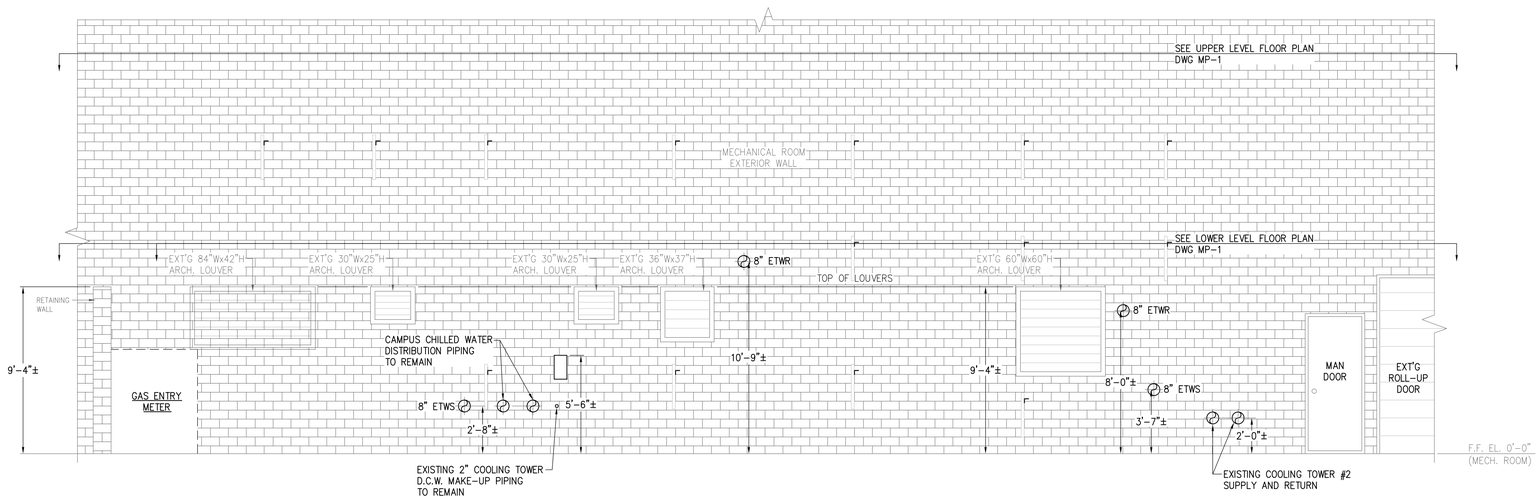

1 MP-1 COOLING TOWER PIPING/LOUVER ELEVATION AT BUILDING EXTERIOR WALL

SCALE: ¼" = 1'-0"

ALL ELEV. DIMENSIONS REFERENCED FROM MECHANICAL ROOM FLOOR.

EXISTING PIPING PENETRATIONS THROUGH BUILDING EXTERIOR WALL SHALL BE RESEALED WATERTIGHT AFTER NEW CONNECTIONS ARE MADE. INSULATION SHALL EXTEND THROUGH WALL.

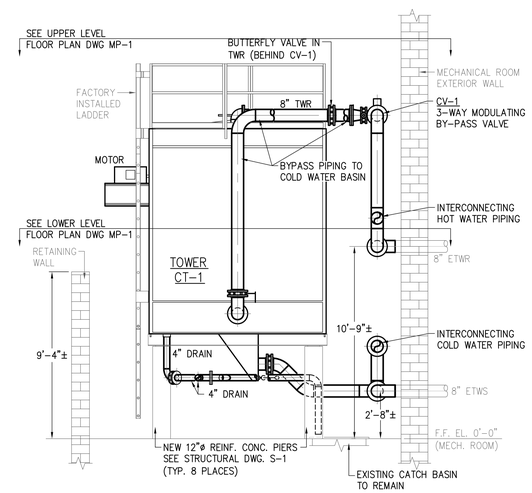

3 MP-1 COOLING TOWER #1 PIPING ELEVATION

SCALE: ¼" = 1'-0"

ALL ELEV. DIMENSIONS REFERENCED FROM MECHANICAL ROOM FLOOR

EXISTING PIPING PENETRATIONS THROUGH BUILDING EXTERIOR WALL SHALL BE RESEALED WATERTIGHT AFTER NEW CONNECTIONS ARE MADE. INSULATION SHALL EXTEND THROUGH WALL.

This drawing is the property of Peritus Engineers & Associates, Inc. and shall not be used or reproduced without their written permission. © 2012 PERITUS ENGINEERS & ASSOCIATES, INC.

REVISIONS

NO.	DATE	BY	DESCRIPTION
0	07/06/12	JCP	ISSUED FOR BID

SOUTH CAROLINA PROFESSIONAL ENGINEER 07/06/12 No. 25120 JOHN C. PARKER

SOUTH CAROLINA PERITUS ENGINEERS & ASSOCIATES, INC. No. C00053 CERTIFICATE OF AUTHORIZATION

Peritus
ENGINEERS & ASSOCIATES, INC.
P. O. BOX 16598
GREENVILLE, SOUTH CAROLINA
864-277-8290
FAX: 864-277-8290
E-MAIL: peritus@peritusengineers.com

© 2012 PERITUS ENGINEERS & ASSOCIATES, INC.

HODGE CENTER
COOLING TOWERS REPLACEMENT
SC STATE PROJECT #H34-9542-JM-C
SPARTANBURG, SOUTH CAROLINA

DESIGN	DRAWN
JCP	TMI

CHECKED: JCP
DATE: 6/22/12
JOB NO.: PERITUS #120113
SHEET: MP-2
3 OF 4 SHEETS

This drawing is the property of Peritus Engineers & Associates, Inc. and shall not be used or reproduced without their written permission. © 2012 PERITUS ENGINEERS & ASSOCIATES, INC.

COOLING TOWER SCHEDULE – INDUCED DRAFT CROSSFLOW TYPE

ITEM	MARLEY No.	OPERATING CONDITIONS	HEAT TRANSFER PERFORMANCE			G.P.M.	TOTAL HEAT REJECTION (Btuh)	VOLTAGE	TOTAL FAN AIRFLOW (CFM)	FAN H.P.(QTY)	OPERATING WEIGHT	REMARKS
			AMBIENT TEMP.	WATER TEMP.								
			W.B.	°F IN	°F OUT							
CT-1	NC8405QAN1	SUMMER	79.85	95.0	85.0	1050	5,231,600	460/3/60	111,000	20(1)	20,330	SEE NOTES #1-#20
CT-3	NC8405QAN1	SUMMER	79.85	95.0	85.0	1050	5,231,600	460/3/60	111,000	20(1)	20,330	SEE NOTES #1-#20

NOTES:

1. SUMP HEATER-12KW, 460/3/60, INCLUDING HEATER ELEMENT, WATER TEMP. SENSOR PROBE AND NEMA4X PANEL WITH CONTACTOR, TRANSFORMER AND LOW WATER CUTOFF.
2. GALVANIZED STEEL CASING, GALVANIZED STEEL STRUCTURE.
3. STAINLESS STEEL FULLY WELDED, WATERTIGHT COLD WATER COLLECTION BASIN.
4. STAINLESS STEEL HOT WATER DISTRIBUTION BASIN.
5. LOW SOUND FAN WITH ALUMINUM FAN BLADES.
6. FIVE (5) YEAR GEAR-REDUCER WARRANTY.
7. MOTOR MOUNT OUTSIDE AIRSTREAM (FIELD MOUNTED AND ALIGNED DRIVESHAFT.)
8. 15 MIL PVC FILM FILL WITH INTEGRAL LOUVERS AND DRIFT ELIMINATORS.
9. HDG STEEL FAN GUARD.
10. 4" DIA. COMBINATION DRAIN AND OVERFLOW.
11. 1" WATER MAKE-UP FLOAT VALVE.
12. QTY (2) 8" HORIZONTAL FLOW CONTROL VALVES.
13. VARIABLE FLOW HOT WATER DISTRIBUTION NOZZLES.
14. EXTERNAL LUBE LINE WITH DIPSTICK.
15. COLLECTION BASIN AND PLENUM AREA ACCESS DOOR, LOCATED ON ENDWALLS.
16. STAINLESS STEEL PLENUM WALKWAY IN EACH CELL.
17. PERIMETER GUARDRAIL, KNEE RAIL, AND TOEBOARD AT TOP OF TOWER WITH (1) CAGED FACE LADDER WITH 60" EXTENSION.
18. VIBRATION CUTOFF SWITCH.
19. NOMINAL OVERALL SIZE: 19'-11"W x 9'-10¾"L x 11'-11¾"H.
20. PREMIUM EFFICIENCY, INVERTER DUTY NAMEPLATED MOTOR, 1.15 SF, TEFC, 1800 RPM NOMINAL.

CONTROL VALVE SCHEDULE

SYMBOL	SERVICE	SIZE	CV	G.P.M.	dp FEET	TYPE	No. REQ'D
CV-1	CT-1 BY-PASS	6"	1025	1050	2.4	3-WAY	1
CV-3	CT-3 BY-PASS	6"	1025	1050	2.4	3-WAY	1

NOTES:

1. VALVE SELECTION BASED UPON "JCI" MODEL # VFC-060 WITH MODULATING PNEUMATIC ACTUATOR.

VARIABLE FREQUENCY DRIVE SCHEDULE

TAG	SERVICE	ABB MODEL No.	H.P.	OUTPUT AMPS	VOLTAGE	REMARKS
VFD-1	CT-1	ACH550-VCR-031A-4	20	31	460/3/60	SEE NOTE #1
VFD-3	CT-3	ACH550-VCR-031A-4	20	31	460/3/60	SEE NOTE #1

NOTES:

1. VERTICAL "E-CLIPSE-BYPASS", CIRCUIT BREAKER DISCONNECT, NEMA 1 UL TYPE 1 ENCLOSURE, N2 COMMUNICATIONS BUS, WITH INPUT/OUTPUT CARDS FOR START/STOP, SPEED CONTROL INPUT AND GENERAL ALARM/FAULT OUTPUT.

MECHANICAL GENERAL NOTES

1. ALL SCHEDULES SHOWN ARE THE PURPOSE OF AIDING THE CONTRACTOR. THE CONTRACTOR SHALL BE RESPONSIBLE FOR ALL CORRECT TOTALS.
2. CO-ORDINATE HVAC INSTALLATION WITH ALL OTHER TRADES, INCLUDING ELECTRICAL.
3. REFER TO ELECTRICAL DRAWINGS FOR POWER CONNECTION POINTS.
4. ALL PIPING INSULATION SHALL COMPLY WITH SECTION 503 OF THE INTERNATIONAL ENERGY CONSERVATION CODE. 2006 EDITION.
5. ALL ELECTRICALLY POWERED EQUIPMENT SHALL BE LISTED AND LABELED PER NATIONAL ELECTRICAL CODE, AND INTERNATIONAL MECHANICAL CODE, 2009 EDITION, CHAPTER 3.
6. ALL EQUIPMENT SHALL BE ACCESSIBLE PER INTERNATIONAL MECHANICAL CODE 2009 EDITION, CHAPTER 3.
7. ALL PIPING ARRANGEMENT AND ROUTING AS SHOWN IS DIAGRAMMATIC AND MAY REQUIRE ALTERATIONS DIFFERENT FROM THAT SHOWN IN ORDER TO ACCOMMODATE STRUCTURE/ARCHITECTURAL FEATURES. CONTRACTOR SHALL FIELD VERIFY AND MAKE ALTERATIONS OR REVISIONS AS REQUIRED.
8. THE HORSEPOWERS SHOWN ARE MIN. REQUIRED FOR PRESENT AND/OR FUTURE GROWTH/OPERATION. IN NO CASE WILL ANY MOTOR H.P. REDUCTION FROM THAT SPECIFIED BE ACCEPTED.
9. CONTRACTOR SHALL RECEIVE AND OFFLOAD NEW CHILLER. COORDINATE EXACT OFFLOADING LOCATION WITH OWNER. CONTRACTOR SHALL PROVIDE FOR THE RIGGING, TRANSPORT, AND PLACEMENT OF NEW CHILLER ON TO EXISTING EQUIPMENT PAD WHEN WORK COMMENCES.

MECHANICAL LEGEND

SYMBOL	DESCRIPTION
ETWS	EXISTING TOWER WATER SUPPLY PIPING
ETWR	EXISTING TOWER WATER RETURN PIPING
—D—	DRAIN PIPING
—DCW—	DOMESTIC COLD WATER PIPING
—TWS—	TOWER WATER SUPPLY (TWS) PIPING
— —TWR— —	TOWER WATER RETURN (TWR) PIPING
	CLEAN OUT (C.O.)
	BALL VALVE
	CHECK VALVE
	STRAINER ASSEMBLY
	CIRCUIT BALANCER
	BUTTERFLY VALVE (LUG BODY)
	2-WAY CONTROL VALVE
	3-WAY CONTROL VALVE
	PRESSURE REDUCING VALVE
	REDUCER
	UNION
	TRIPLE DUTY VALVE
	PRESSURE GAUGE
	THERMOMETER
N.O.	NORMALLY OPEN
N.C.	NORMALLY CLOSED
	EXISTING PIPE TO REMAIN

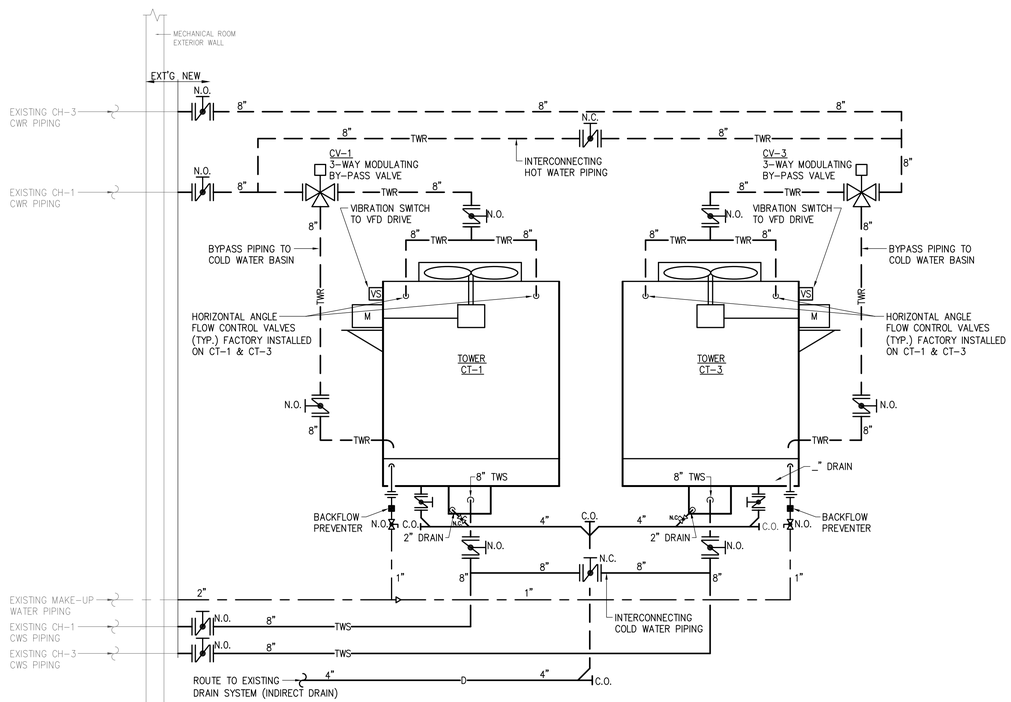

COOLING TOWER PIPING FLOW DIAGRAM

NO SCALE

ALL PIPING OUTSIDE AND AT TOWER TO BE ELECTRIC TAPE TRACED

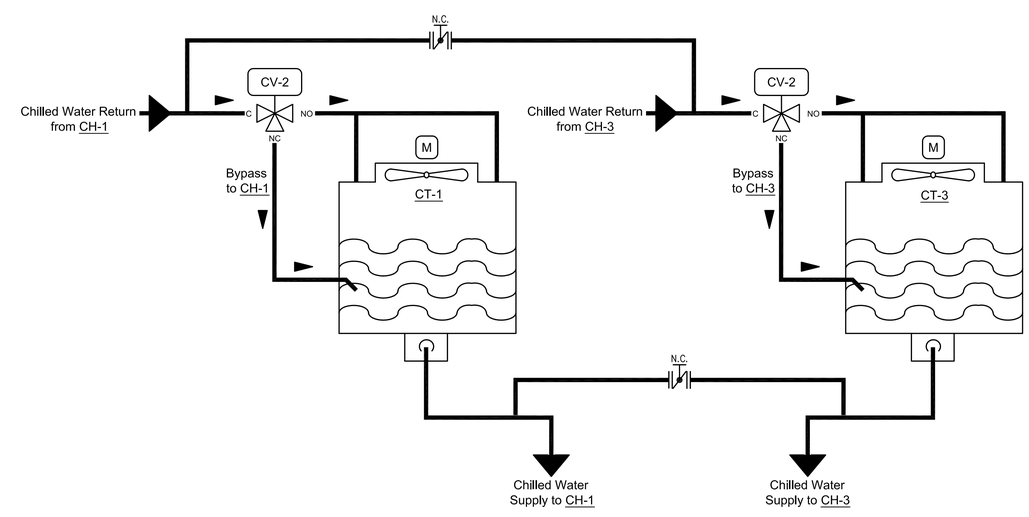

COOLING TOWER CONTROL SCHEMATIC

NO SCALE

SEQUENCE OF OPERATION

EXISTING "JCI CONTROLS SHALL BE UTILIZED AND MODIFIED AS REQUIRED FOR NEW COOLING TOWER OPERATION.
WHEN CONDENSER PUMP STATUS IS "ON", THE COOLING TOWER WATER BYPASS VALVE SHALL MODULATE OPEN AND COOLING TOWER FANS SHALL MODULATE (THROUGH VFD CONTROL) TO MAINTAIN COOLING TOWER SUPPLY WATER SETPOINT.
THE COOLING TOWER FAN SHALL AUTOMATICALLY START WHEN THE COOLING TOWER BYPASS VALVE IS INDEXED FOR FLOW OVER THE TOWER AND MORE COOLING IS REQUIRED. THE VARIABLE SPEED DRIVE WILL MODULATE TO MAINTAIN THE CONDENSER WATER AT SETPOINT. IF FOR ANY REASON THE FAN STATUS DOES NOT MATCH ITS COMMANDED VALUE AN ALARM WILL BE GENERATED.

NO.	DATE	BY	DESCRIPTION
0	07/06/12	JCP	ISSUED FOR BID

REVISIONS

SOUTH CAROLINA PROFESSIONAL ENGINEER 07/06/12 No. 25120 JOHN C. PARKER

SOUTH CAROLINA PERITUS ENGINEERS & ASSOCIATES, INC. No. C00053 CERTIFICATE OF AUTHORIZATION

Peritus
ENGINEERS & ASSOCIATES, INC.
P. O. BOX 16598
GREENVILLE, SOUTH CAROLINA
864-277-8292
FAX: 864-277-8290
E-MAIL: peritus@peritusengineers.com
© 2012 PERITUS ENGINEERS & ASSOCIATES, INC.

HODGE CENTER
COOLING TOWERS REPLACEMENT
SC STATE PROJECT #H34-9542-JM-C
SPARTANBURG, SOUTH CAROLINA

DESIGN	JCP
DRAWN	TMI
CHECKED	JCP
DATE	6/22/12
JOB NO.	PERITUS #120113
SHEET	MP-3

4 OF 4 SHEETS

SYMBOL	DESCRIPTION
HOMERUN A-1,3	HOME RUN TO LIGHTING/SERVICE PANEL. HASH MARKS, WHEN SHOWN, INDICATE NUMBERS OF CONDUCTORS. " / " INDICATES HOT WIRE, "N" INDICATES NEUTRAL CONDUCTOR, "G" INDICATES GROUND CONDUCTOR. HOME RUN NOTE INDICATES PANEL NAME AND CIRCUIT NAME OR FEEDER TAG. CONDUCTORS SHALL BE #12 AWG IN 3/4" CONDUIT UNLESS NOTED OTHERWISE. ANY HOME RUN OR CONDUIT WITHOUT HASH MARKS IS TO CONTAIN 3 CONDUCTORS; 1 HOT, 1 NEUTRAL, AND 1 EQUIPMENT GROUND, EACH HOT CIRCUIT SHALL BE PAIRED WITH A SEPARATE NEUTRAL CONDUCTOR. SHARING OF NEUTRAL CONDUCTORS BETWEEN CIRCUITS IS NOT ALLOWED.
	EXPOSED CONDUIT
	CONDUIT RUN IN SLAB OR UNDERGROUND.
	CONDUIT RUN CONCEALED ABOVE CEILING OR IN WALLS, UNLESS NOTED OTHERWISE.
	CONDUIT JUNCTION IN CONDULET OR JUNCTION BOX.
	FLEXIBLE CONDUIT
	CONDUIT TURNING UP
	CONDUIT TURNING DOWN
2HP M	MOTOR, HORSEPOWER AS SHOWN.
30/20/3P/3R	SAFETY DISCONNECT SWITCH. "30" INDICATES AMP RATING, "20" INDICATES FUSE SIZES, "3P" INDICATES NUMBER OF POLES, ENCLOSURE TO BE NEMA 1 UNLESS NOTED OTHERWISE (3R, 4X, ETC.) SQUARE D H300 SERIES HEAVY DUTY SAFETY SWITCH
	CONNECTION TO A SPECIFIC PIECE OF EQUIPMENT. COORDINATE EXACT LOCATION AND REQUIREMENTS WITH PROVIDER / INSTALLER OF THE EQUIPMENT.

ELECTRICAL GENERAL NOTES:

1. INSPECT SITE PRIOR TO SUBMITTING BID. DRAWINGS ARE INTENDED TO COVER THE REQUIRED ELECTRICAL SYSTEMS. DRAWINGS MAY NOT SHOW COMPLETE OR ACCURATE DETAILS OF THE BUILDING OR SYSTEM IN EVERY RESPECT. IT IS THE RESPONSIBILITY OF THE CONTRACTOR TO OBTAIN ANY ADDITIONAL INFORMATION AS REQUIRED.
2. CONFORM TO THE NATIONAL ELECTRICAL CODE (2008), IBC (2009), APPLICABLE NEMA, ANSI AND IEEE PUBLICATIONS, U.L. AND ADA STANDARDS AND OSHA REQUIREMENTS. COMPLY WITH LOCAL, COUNTY, STATE AND NATIONAL CODES HAVING JURISDICTION.
3. FURNISH AND INSTALL ALL MATERIALS IN A NEAT AND WORKMANLIKE FASHION. ALL MATERIALS SHALL BE NEW, WITH FIRST QUALITY AND UL LABEL.
4. VERIFY ALL DIMENSIONS AND CLEARANCES PRIOR TO INSTALLATION OF EQUIPMENT AND RACEWAYS. CONTRACTOR IS RESPONSIBLE FOR COORDINATION OF WORK WITH THAT OF ALL OTHER TRADES AS REQUIRED.
5. INTERIOR CONDUIT SHALL BE EMT FOR BRANCH CIRCUIT WIRING AS ALLOWED BY NEC, EXCEPT THAT SET SCREW OR CRIMP FITTINGS ARE NOT ALLOWED. WHERE RUN EXPOSED IN EXTERIOR, OR BELOW 8'-0" SUBJECT TO PHYSICAL DAMAGE CONDUITS SHALL BE RIGID GALVANIZED STEEL. MINIMUM CONDUIT SIZE SHALL BE 3/4". ALL CONDUCTORS SHALL BE TYPE THHN/THWN, STRANDED 600V COPPER BUILDING WIRE. MINIMUM SIZE SHALL BE #12 AWG COPPER UNLESS NOTED. UNDERGROUND CONDUITS SHALL BE PVC SCHEDULE 40 WITH TRANSITION TO RIGID GALVANIZED STEEL FOR EXPOSED CONDUITS.
6. PROVIDE GROUNDING FOR ALL EQUIPMENT IN ACCORDANCE WITH ARTICLE 250 OF THE NATIONAL ELECTRICAL CODE. GROUND SERVICE TO BUILDING STEEL, DRIVEN GROUND ROD AND COLD WATER PIPE.
7. ALL ENCLOSURES SHALL BE OF THE NEMA TYPE WHICH IS SUITABLE FOR THE APPLICATION.
8. SEAL ALL CONDUIT PENETRATIONS TO MATCH RATING OF WALL BEING PENETRATED.
9. ALL WORK SHALL HAVE PROPER LABELING AND NAMEPLATES. ALL CIRCUITS SHALL BE LABELED AT PANELS AND BOXES AS INDICATED. ALL PANELS AND DISCONNECTS ARE TO BE PERMANENTLY MARKED WITH NAMEPLATE FOR EQUIPMENT SERVED WITH EQUIPMENT ID, VOLTAGE AND SOURCE OF POWER. ALL PANELS ARE TO BE PROVIDED WITH TYPEWRITTEN PANEL SCHEDULES MODIFIED TO SHOW NEW CIRCUITRY.
10. THOROUGHLY CLEAN ALL EQUIPMENT AND SYSTEMS BEFORE PLACING IN OPERATION. RESTORE FINISHED SURFACES IF DAMAGED AND DELIVER THE ENTIRE INSTALLATION IN AN APPROVED CONDITION. INSTRUCT THE OWNERS' PERSONNEL IN THE PROPER OPERATION AND MAINTENANCE OF THE SYSTEMS. FURNISH TO THE OWNER THREE SETS OF OPERATION AND MAINTENANCE MANUALS FOR EACH SYSTEM.
11. GUARANTEE THE WORK INSTALLED FOR A PERIOD OF ONE YEAR AFTER DATE OF FINAL ACCEPTANCE. DEFECTS WHICH APPEAR AS A RESULT OF NORMAL USAGE SHALL BE REMEDIED BY THE CONTRACTOR TO THE COMPLETE SATISFACTION OF THE OWNER WITHOUT COST TO THE OWNER.
12. CONTRACTOR SHALL KEEP CURRENT A SET OF PLANS FOR THE DURATION OF CONSTRUCTION WITH ALL CHANGES TO WORK NEATLY AND ACCURATELY MARKED IN RED AND SHALL TURN OVER TO OWNER AT COMPLETION OF PROJECT.
13. ALL ELECTRICAL EQUIPMENT SHALL BE INSTALLED TO MEET SEISMIC REQUIREMENTS OF 2009 IBC AND SHALL BE SUBJECT TO SPECIAL INSPECTION REQUIREMENTS, CHAPTER 17 OF 2006 IBC AS IT RELATES TO ELECTRICAL EQUIPMENT.

ABBREVIATIONS:

AFF	ABOVE FINISH FLOOR	MFR	MANUFACTURER
AFG	ABOVE FINISHED GRADE	MH	MAN HOLE
ACH	ABOVE COUNTER HEIGHT	MDP	MAIN DISTRIBUTION PANEL
AL	ALUMINUM	MSB	MAIN SWITCHBOARD
BKR	BREAKER	NTS	NOT TO SCALE
CU	COPPER	PH	PHASE
CKT	CIRCUIT	PNL	PANEL
D	DEDICATED OUTLET	RECPT	RECEPTACLE (R.)
DWG	DRAWING	REQD	REQUIRED
EC	ELECTRICAL CONTRACTOR	SP	SURGE PROTECTED DEVICE
EWC	ELECTRIC WATER COOLER	SW	SWITCH
FU	FUSE	UV	UNIT VENTILATOR
FWE	FURNISHED WITH EQUIPMENT	UNO	UNLESS NOTED OTHERWISE
GFI	GROUND FAULT INTERRUPTER DEVICE	UH	UNIT HEATER
GTD	GENERATOR TRANSFER DEVICE	UGND	UNDERGROUND
HH	HAND HOLE	W/	WITH
IG	ISOLATED GROUND	WH	WATER HEATER
LTG	LIGHTING (L.)	WP	WEATHER PROOF
MCC	MOTOR CONTROL CENTER	XFMR	TRANSFORMER
MLO	MAIN LUGS ONLY		
MCB	MAIN CIRCUIT BREAKER		

BURDETTE ENGINEERING, INC.
102 Pilgrim Road
Greenville, SC 29607
(864) 297-8717
(864) 297-8719 (FAX)
EMAIL:Bei@BurdetteEngr.com
BEI JOB NO. 11850D

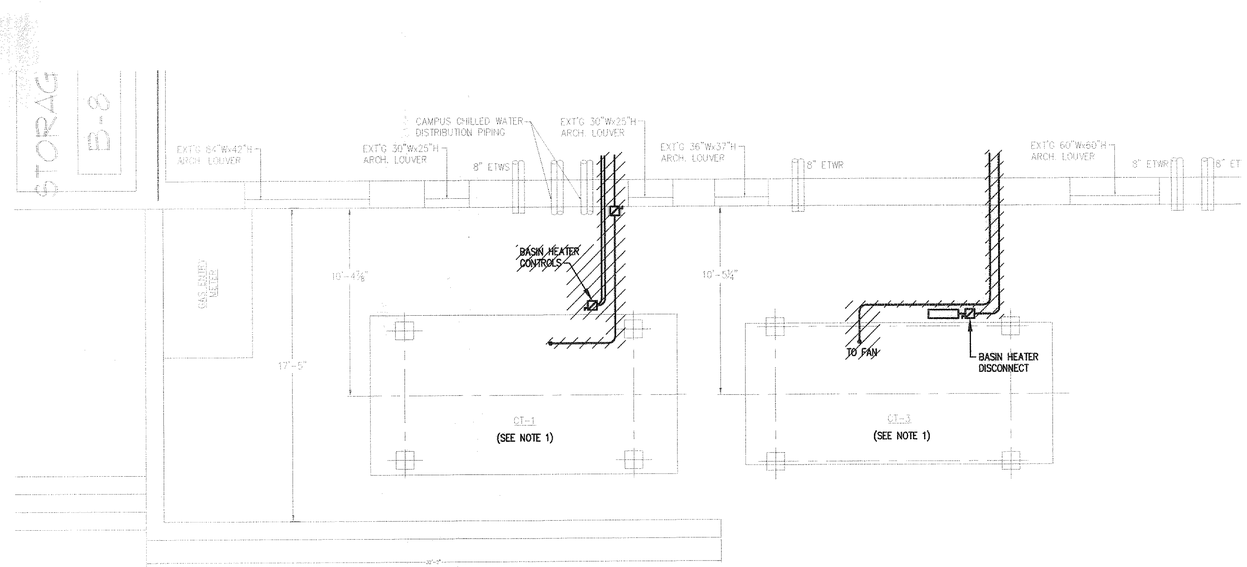

NOTES:

1. REMOVE ELECTRICAL DISCONNECTS, CONDUIT AND WIRE ASSOCIATED WITH EXISTING COOLING TOWERS BACK TO MCC. SEE E-2 FOR NEW WORK. REMOVE FAN FEEDERS, BASIN HEATER FEEDERS AND DISCONNECT HEAT TRACE POWER.

PROJECT NORTH

A / E-1 ELECTRICAL DEMOLITION PLAN
SCALE: 1/4" = 1'-0"

4 0 4 8 12
1/4" = 1'-0"

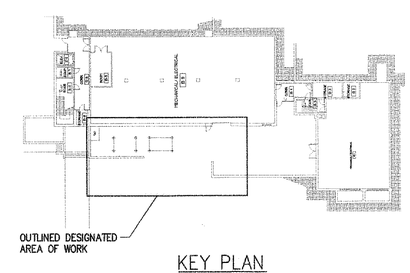

KEY PLAN
NO SCALE

NO.	DATE	BY	DESCRIPTION
0	07/06/12	DJB	ISSUED FOR BIDS

REVISIONS

SOUTH CAROLINA PROFESSIONAL ENGINEER DJB No. 12080 BURDETTE

SOUTH CAROLINA BURDETTE ENGINEERING, INC. No. 0204PER CERTIFICATE OF AUTHORIZATION

Peritus
ENGINEERS & ASSOCIATES, INC.
P. O. BOX 16568
GREENVILLE, SOUTH CAROLINA
29606-1568
FAX: 864-277-3230
E-MAIL: peritus@peritusengineers.com

© 2012 PERITUS ENGINEERS & ASSOCIATES, INC.

HODGE CENTER
COOLING TOWERS REPLACEMENT
SC STATE PROJECT #H34-9542-JM-C
SPARTANBURG, SOUTH CAROLINA

DESIGN	DRAWN
DJB	TMP
CHECKED	
DJB	
DATE	
6/22/12	
JOB NO.	
PERITUS #120113	
SHEET	
E-1	
1 OF 2 SHEETS	

This drawing is the property of Peritus Engineers & Associates, Inc. and shall not be used or reproduced without their written permission. © 2012 PERITUS ENGINEERS & ASSOCIATES, INC.

G:\CAD\11850D USC UPSTATE (PERITUS)\11850D HODGE CENTER COOLING TOWER REPLACEMENT\11850DF001.dwg, 7/23/2012 12:10:00 PM

This drawing is the property of Peritus Engineers & Associates, Inc. and shall not be used or reproduced without their written permission. © 2012 PERITUS ENGINEERS & ASSOCIATES, INC.

BURDETTE ENGINEERING, INC.
102 Pilgrim Road
Greenville, SC 29607
(864) 297-8717
(864) 297-8719 (FAX)
EMAIL:Bei@BurdetteEngr.com
BEI JOB NO. 1850D

MOTOR CONTROL CENTER–FRONT VIEW

B/E-2 EXISTING MCC
NOT TO SCALE

EXISTING MC IS FURNAS SYSTEM 89, 1200A HORIZ BUS, 300A VERTICAL AND NEUTRAL BUS, 42KAIC, 600V MAX. VERIFY BY TRACING EXISTING CIRCUITS THAT FEEDERS SERVE LOADS NOTED.

1. COOLING TOWER HEATER, SIZE 2 STARTER, 20A FUSES(3). PROVIDE NEW NAMEPLATE "COOLING TOWER No. 3 BASIN HEATER". REMOVE SIZE 2 STARTER AND FUSES, TURN OVER TO OWNER. PROVIDE NEW 20A FUSES(3) AND WIRE TO HEATER. REMOVE HOA SWITCH AND PLUG HOLE.
2. 3. COOLING TOWER No. 3 FAN, 'HIGH SPEED STARTER' (ITEM 2) AND 'LOW SPEED STARTER' (ITEM 3). REMOVE WIRING TO CT No. 3 AND PROVIDE NEW NAMEPLATES. REMOVE NP'S FOR CT FAN.
4. CLEAN AND REWIRE FUSED SWITCH COMPARTMENT. PROVIDE FUSES(3) AND FEED NEW CT-3 FAN. PROVIDE NAMEPLATE "COOLING TOWER No. 3 FAN VFD".
5. COOLING TOWER No. 1 BASIN HEATER FUSED SWITCH COMPARTMENT. REMOVE EXISTING WIRING. PROVIDE NEW NAMEPLATE "COOLING TOWER No. 1 BASIN HEATER" AND PROVIDE NEW 20A FUSES(3).
6. COOLING TOWER No. 1 FAN REMOVE EXISTING WIRING AND STARTER AND HOA SWITCH PLUG HOLE. PROVIDE NEW NAMEPLATE "COOLING TOWER No. 1 FAN VFD". PROVIDE NEW FUSES(3). PROVIDE FUSE BLOCK AS REQUIRED.

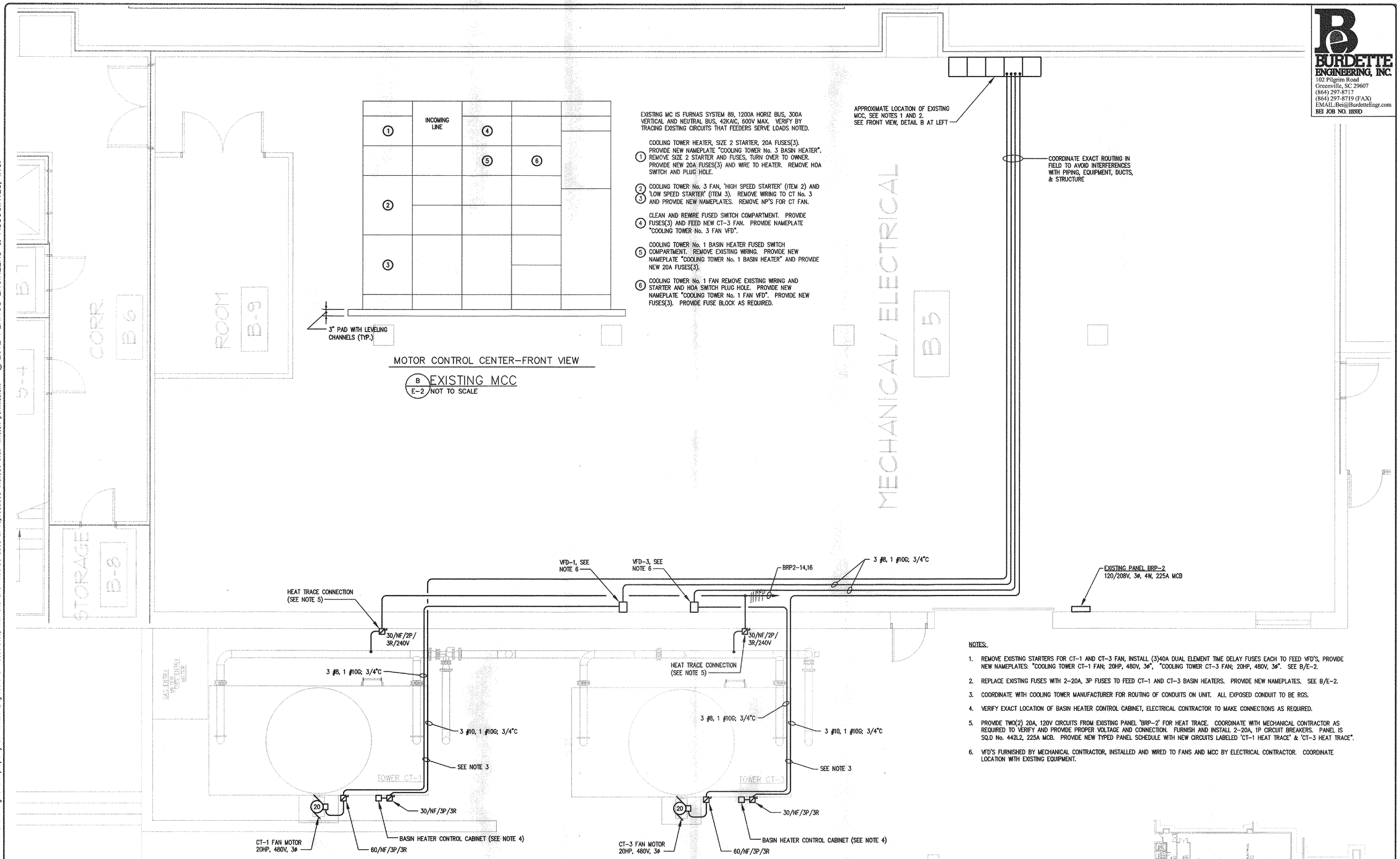

A/E-2 ELECTRICAL POWER PLAN – UPPER LEVEL
SCALE: 1/4" = 1'-0"

4 0 4 8 12
1/4" = 1'-0"

NOTES:

1. REMOVE EXISTING STARTERS FOR CT-1 AND CT-3 FAN, INSTALL (3)40A DUAL ELEMENT TIME DELAY FUSES EACH TO FEED VFD'S, PROVIDE NEW NAMEPLATES: "COOLING TOWER CT-1 FAN; 20HP, 480V, 3ø", "COOLING TOWER CT-3 FAN; 20HP, 480V, 3ø". SEE B/E-2.
2. REPLACE EXISTING FUSES WITH 2-20A, 3P FUSES TO FEED CT-1 AND CT-3 BASIN HEATERS. PROVIDE NEW NAMEPLATES. SEE B/E-2.
3. COORDINATE WITH COOLING TOWER MANUFACTURER FOR ROUTING OF CONDUITS ON UNIT. ALL EXPOSED CONDUIT TO BE RGS.
4. VERIFY EXACT LOCATION OF BASIN HEATER CONTROL CABINET, ELECTRICAL CONTRACTOR TO MAKE CONNECTIONS AS REQUIRED.
5. PROVIDE TWO(2) 20A, 120V CIRCUITS FROM EXISTING PANEL 'BRP-2' FOR HEAT TRACE. COORDINATE WITH MECHANICAL CONTRACTOR AS REQUIRED TO VERIFY AND PROVIDE PROPER VOLTAGE AND CONNECTION. FURNISH AND INSTALL 2-20A, 1P CIRCUIT BREAKERS. PANEL IS SQ.D No. 442L2, 225A MCB. PROVIDE NEW TYPED PANEL SCHEDULE WITH NEW CIRCUITS LABELED 'CT-1 HEAT TRACE' & 'CT-3 HEAT TRACE".
6. VFD'S FURNISHED BY MECHANICAL CONTRACTOR, INSTALLED AND WIRED TO FANS AND MCC BY ELECTRICAL CONTRACTOR. COORDINATE LOCATION WITH EXISTING EQUIPMENT.

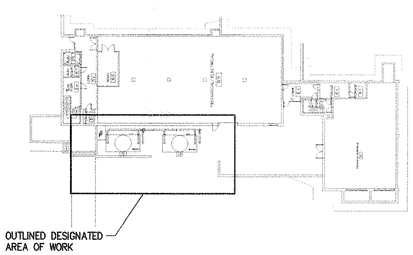

NO.	DATE	BY	DESCRIPTION
0	07/06/12	DJB	ISSUED FOR BIDS

REVISIONS

SOUTH CAROLINA PROFESSIONAL ENGINEER No. 13559 DONALD J. BURDETTE REGISTERED

SOUTH CAROLINA NOTICE OF CERTIFICATE OF AUTHORIZATION BURDETTE ENGINEERING, INC. No. COR04K

Peritus ENGINEERS & ASSOCIATES, INC.
P. O. BOX 16598
GREENVILLE, SOUTH CAROLINA
864-277-5387
FAX: 864-277-5320
E-MAIL: peritus@peritusengineers.com
© 2012 PERITUS ENGINEERS & ASSOCIATES, INC.

HODGE CENTER
COOLING TOWERS REPLACEMENT
SC STATE PROJECT #H34-9542-JM-C
SPARTANBURG, SOUTH CAROLINA

DESIGN: DJB / DRAWN: TMP
CHECKED: DJB
DATE: 6/22/12
JOB NO.: PERITUS #120113
SHEET: E-2
2 OF 2 SHEETS

G:\CAD\1850 USC UPSTATE (PERITUS)\1850D HODGE CENTER COOLING TOWER REPLACEMENT\1850DF002.dwg, 7/23/2012 12:09:42 PM

This drawing is the property of Peritus Engineers & Associates, Inc. and shall not be used or reproduced without their written permission. © 2012 PERITUS ENGINEERS & ASSOCIATES, INC.

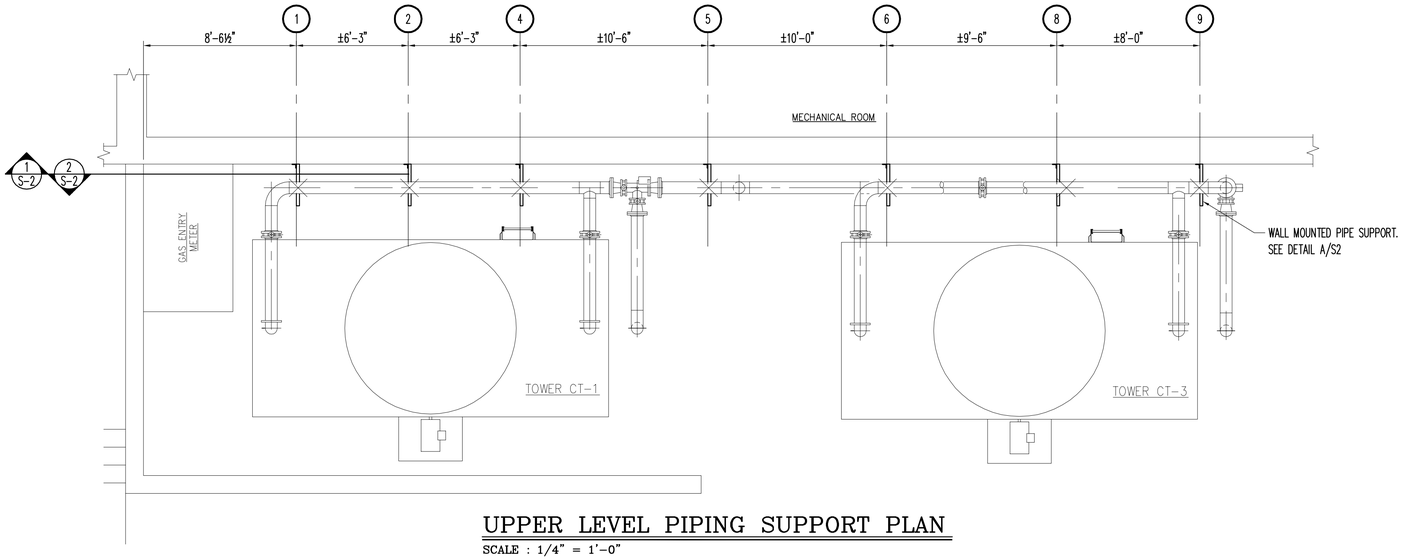

UPPER LEVEL PIPING SUPPORT PLAN

SCALE : 1/4" = 1'-0"

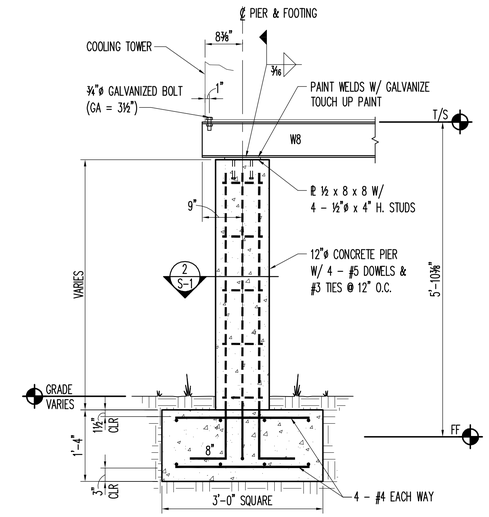

SECTION 1/S1

SCALE : ¾" = 1'-0"

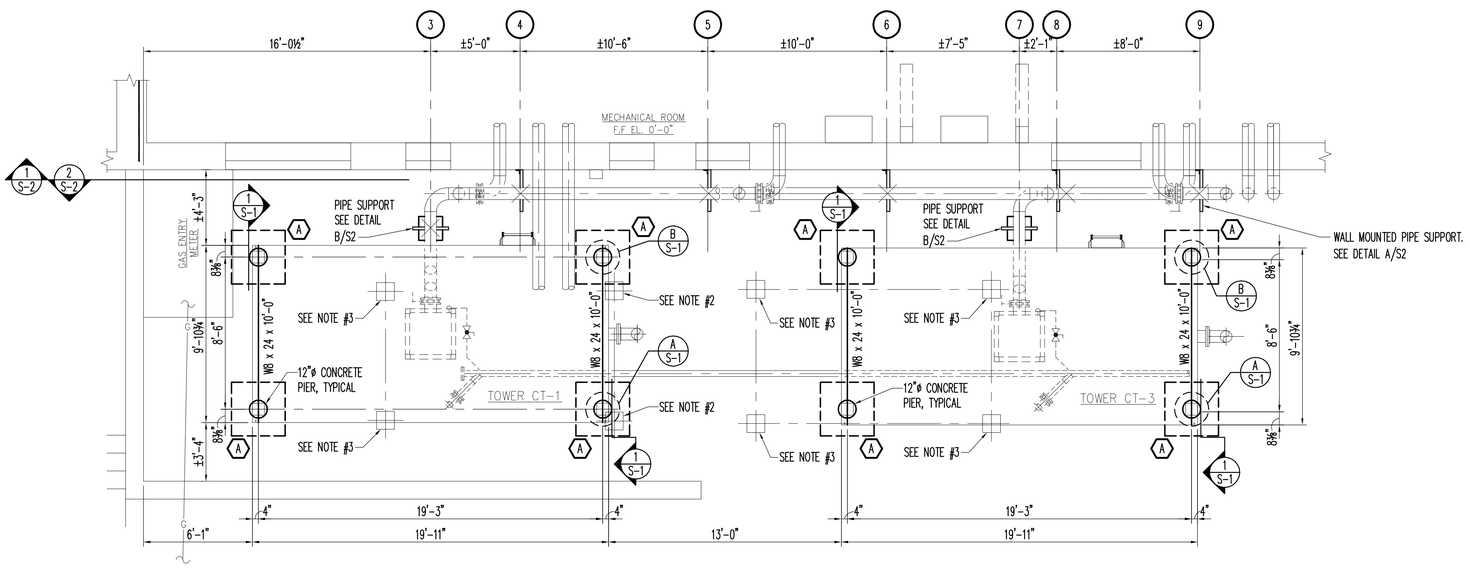

FOUNDATION / SUPPORTING STEEL PLAN

SCALE : 1/4" = 1'-0"

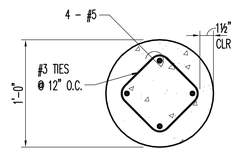

SECTION 2/S1

SCALE : 1½" = 1'-0"

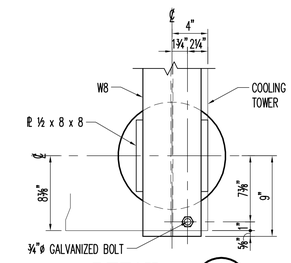

DETAIL A/S1

SCALE : 1½" = 1'-0"

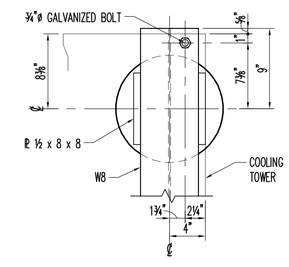

DETAIL B/S1

SCALE : 1½" = 1'-0"

FOUNDATION NOTES

1. FOUNDATION DESIGN IS BASED ON AN ASSUMED ALLOWABLE SOIL BEARING PRESSURE OF 2,500 PSF.
2. ALL FOOTINGS SHALL BE PLACED ON UNDISTURBED SOIL OR COMPACTED FILL CONFORMING TO 95% STD. DENSITY. ALL FOOTING EXCAVATIONS SHALL BE EXAMINED BY A GEOTECHNICAL ENGINEER PRIOR TO PLACEMENT OF CONCRETE TO VERIFY SOIL BEARING PRESSURE.
3. ALL CONCRETE SHALL OBTAIN A COMPRESSIVE STRENGTH OF 3,000 PSI AT 28 DAYS. ALL CONCRETE SHALL BE POURED WITH A SLUMP OF 2 - 5 INCHES. IF ADDITIONAL SLUMP UP TO 8" IS DESIRED, A SUPERPLASTICIZER ADMIXTURE MAY BE ADDED AT THE JOBSITE.
4. REINFORCING BARS SHALL BE ASTM A615 GRADE 60.
5. ALL CONCRETE WORK SHALL BE DONE IN ACCORDANCE WITH ACI 318.

NOTES

1. TOP OF STEEL SUPPORTS SHALL BE 5'-10⅛" ABOVE FINISHED FLOOR OF THE BUILDING.
2. REMOVE EXISTING PIER & FOOTING AS REQUIRED FOR NEW PIER & FOOTING
3. REMOVE EXISTING PIER & FOOTING. FILL FOOTING CAVITY W/ COMPACTED SOIL
4. CONTACT PALMETTO UTILITY PROTECTION SERVICE (811), METROPOLITAN WATER, & USC UPSTATE PROJECT MANAGER THREE (3) DAYS MINIMUM PRIOR TO EXCAVATING NEW FOOTINGS

FOOTING SCHEDULE

(A) 3'-0" x 3'-0" x 1'-4" W/ 4 - #4 EACH WAY TOP & BOTTOM

MATERIAL SPECIFICATIONS

STEEL BEAMS : A992
STEEL SHAPES & PLATES : A36
WELDS : E70XX
BOLTS : A307
SHOP FINISH : HOT DIP GALVANIZED

DESIGN CRITERIA

OPERATING WEIGHT : 20,330 LBS (EACH CELL)
WIND : 90 MPH
EXPOSURE B
I = 1.15
SEISMIC : DESIGN CATEGORY C
Sds = 0.35 Sds = 0.17
ap = 1.0 Rp = 2.5 Ip = 1.0
Fp = 1,050 LBF

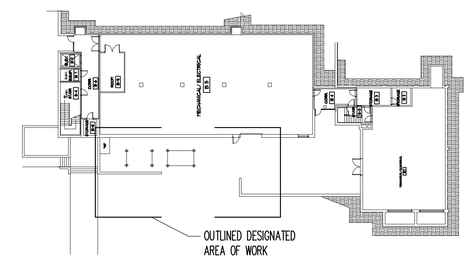

KEY PLAN

SCALE : NTS

REI
ROYAL ENGINEERING, INC.
P.O. BOX 17828
GREENVILLE, S.C. 29606
864.235.4425
FAX 864.235.1330
royaleng@royalenginc.com
12-143

NO.	DATE	BY	DESCRIPTION
0	07/06/12	BR	ISSUED FOR BID

REVISIONS

SOUTH CAROLINA REGISTERED PROFESSIONAL ENGINEER No. 6944 JR BRUCE ROYAL JR.

SOUTH CAROLINA ROYAL ENGINEERING, INC. No. C00222 CERTIFICATE OF AUTHORIZATION

Peritus
ENGINEERS & ASSOCIATES, INC.
P. O. BOX 16598
GREENVILLE, SOUTH CAROLINA
PHONE: 864-277-8200
FAX: 864-277-8290
E-MAIL: peritus@peritusengineers.com
© 2012 PERITUS ENGINEERS & ASSOCIATES, INC.

HODGE CENTER
COOLING TOWERS REPLACEMENT
SC STATE PROJECT #H34-9542-JM-C
SPARTANBURG, SOUTH CAROLINA

DESIGN / DRAWN: BR / CJ
CHECKED: BR
DATE: 6/22/12
JOB NO.: PERITUS #120113
SHEET: S-1
1 OF 2 SHEETS

This drawing is the property of Peritus Engineers & Associates, Inc. and shall not be used or reproduced without their written permission. © 2012 PERITUS ENGINEERS & ASSOCIATES, INC.

REI
ROYAL ENGINEERING, INC.
P.O. BOX 17828
GREENVILLE, S.C.
29606
864.235.4425
FAX 864.235.1330
royaleng@royalenginc.com
12-143

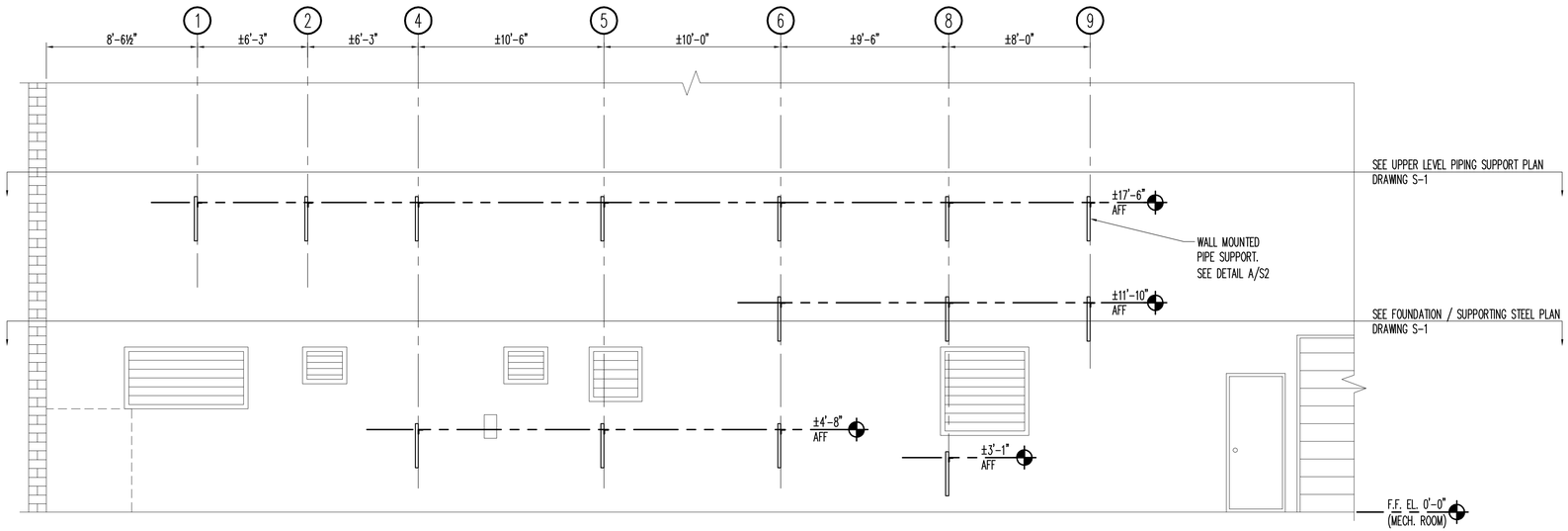

COOLING TOWER PIPING SUPPORT ELEVATION 1/S2

SCALE : 1/4" = 1'-0"

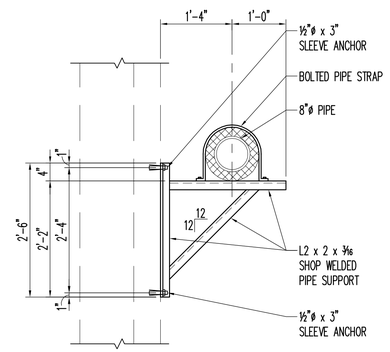

DETAIL A/S2

SCALE : ¾" = 1'-0"

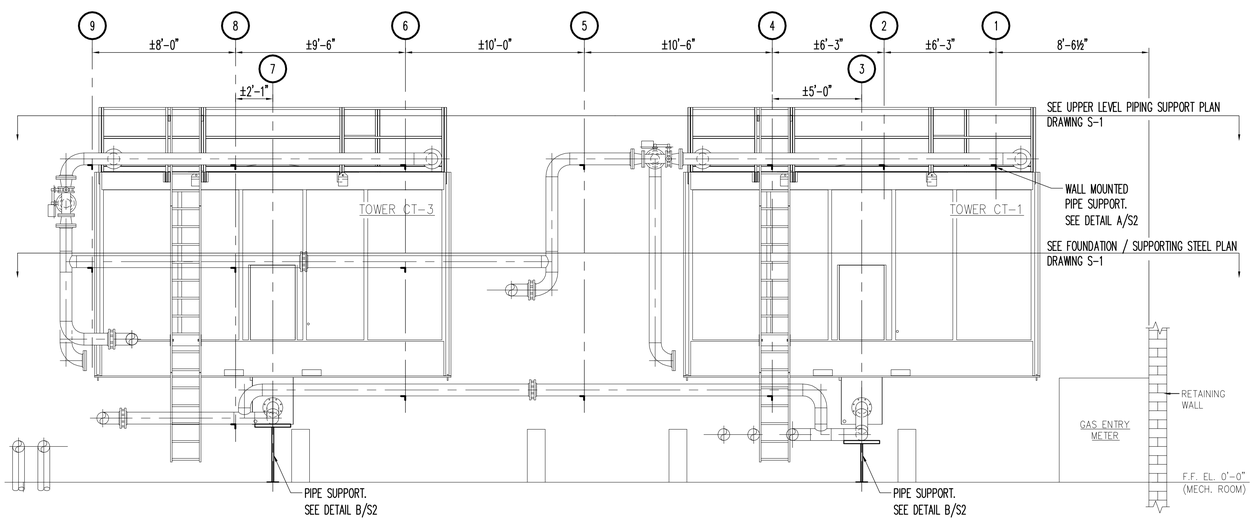

COOLING TOWER PIPING SUPPORT ELEVATION 2/S2

SCALE : 1/4" = 1'-0"

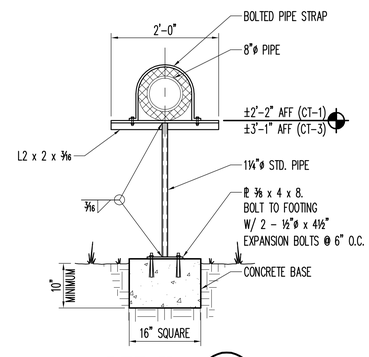

DETAIL B/S2

SCALE : ¾" = 1'-0"

NO.	DATE	BY	DESCRIPTION
0	07/06/12	BR	ISSUED FOR BID

REVISIONS

SOUTH CAROLINA PROFESSIONAL ENGINEER REGISTERED No. 6941 P. BRUCE ROUNTREE JR.

SOUTH CAROLINA ROYAL ENGINEERING, INC. No. C00222 CERTIFICATE OF AUTHORIZATION

Peritus
ENGINEERS & ASSOCIATES, INC.
P. O. BOX 16598
GREENVILLE, SOUTH CAROLINA
PHONE: 864-277-9200
FAX: 864-277-8290
E-MAIL: peritus@peritusengineers.com
© 2012 PERITUS ENGINEERS & ASSOCIATES, INC.

HODGE CENTER
COOLING TOWERS REPLACEMENT
SC STATE PROJECT #H34-9542-JM-C
SPARTANBURG, SOUTH CAROLINA

DESIGN	DRAWN
BR	CJ

CHECKED: BR
DATE: 6/22/12
JOB NO.: PERITUS #120113
SHEET: S-2
2 OF 2 SHEETS